Ceramic Orifice and Whirler Inserted Full Cone Spray Nozzles

Made-to-Order

JUP

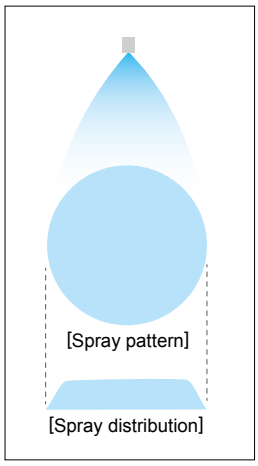

- Full cone spray pattern with a round impact area and uniform distribution.
- Ceramic disc whirler and orifice forming a vortex chamber provide excellent wear resistance.
- Medium spray capacity range.

[STANDARD PRESSURE]
0.2 MPa

[APPLICATIONS]
Cleaning: Gas, incinerator fumes, machinery, eliminators, screen, tanks, crushed stone, earth and sand
Cooling: Gas, machinery, tanks, steel
Spraying: Waste water treatment, aeration, foam breaking, dust suppression

Structure	• One-piece nozzle with a ceramic whirler and orifice that form a ceramic vortex chamber inside.
Material	• Nozzle orifice & whirler: ceramic • Nozzle body: Sizes Rc1 or smaller: S303 Sizes Rc1 1/2 or larger: S316 SPECIAL ORDER MATERIAL: S316 (for sizes Rc1 or smaller), S316L

Pipe conn. size	Dimensions (mm)					Weight (g)
	L1	L2	W	øD	N	
Rc3/8	30	6	17	20	11	41
Rc1/2	39	8	22	25	14	115
Rc3/4	49	10	27	32	15	167
Rc1	59	14	34	40	17	300
Rc1½	80	20	50	58	19	860

[Note] Appearance and dimensions may differ slightly depending on material and nozzle code.

DRAWING

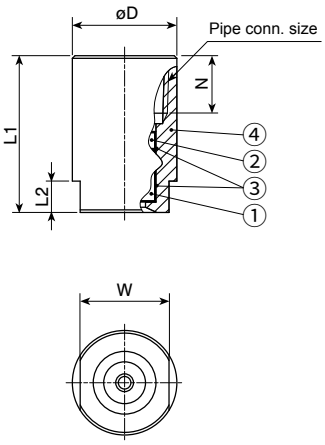

①Ceramic orifice ②Ceramic whirler
③Adhesive: Araldite® H ④Nozzle body

Spray capacity code	Pipe connection size					Spray angle (°)			Spray capacity (L/min)							Mean drop. dia. (μm)	Free pass. dia. (mm)
	Rc3/8	Rc1/2	Rc3/4	Rc1	Rc1½	0.05 MPa	0.2 MPa	0.5 MPa	0.03 MPa	0.05 MPa	0.1 MPa	0.15 MPa	0.2 MPa	0.3 MPa	0.5 MPa		
03	○					50	60	52	–	1.57	2.17	2.62	3.00	3.55	4.37	380	1.2
04	○					50	60	52	–	2.09	2.89	3.50	4.00	4.73	5.83	≀	1.4
05	○					55	65	55	–	2.61	3.61	4.37	5.00	5.91	7.29	490	1.5
06		○				50	60	52	2.46	3.13	4.33	5.24	6.00	7.09	8.75	470	2.0
07		○				55	63	55	2.87	3.65	5.05	6.12	7.00	8.27	10.2		2.0
08		○				55	65	55	3.28	4.18	5.78	6.99	8.00	9.46	11.7	≀	2.0
10		○				60	70	58	4.10	5.22	7.22	8.74	10.0	11.8	14.6		2.2
12		○				63	70	60	4.92	6.26	8.66	10.5	12.0	14.2	17.5	600	2.3
14			○			63	70	60	5.74	7.31	10.1	12.2	14.0	16.5	20.4	580	2.8
16			○			63	70	60	6.56	8.35	11.6	14.0	16.0	18.9	23.3		2.8
18			○			70	77	65	7.38	9.40	13.0	15.7	18.0	21.3	26.2	≀	3.0
20			○			75	80	68	8.20	10.4	14.4	17.5	20.0	23.6	29.2		3.0
23			○			75	80	68	9.43	12.0	16.6	20.1	23.0	27.2	33.5		3.2
26			○			78	83	70	10.7	13.6	18.8	22.7	26.0	30.7	37.9		3.2
30			○			78	83	72	12.3	15.7	21.7	26.2	30.0	35.5	43.7	730	3.4

↗

Spray capacity code	Pipe connection size					Spray angle (°)			Spray capacity (L/min)							Mean drop. dia. (μm)	Free pass. dia. (mm)
	Rc3/8	Rc1/2	Rc3/4	Rc1	Rc1½	0.05 MPa	0.2 MPa	0.5 MPa	0.03 MPa	0.05 MPa	0.1 MPa	0.15 MPa	0.2 MPa	0.3 MPa	0.5 MPa		
35				○		80	83	70	14.4	18.3	25.3	30.6	35.0	41.4	51.0	700	4.0
40				○		80	83	70	16.4	20.9	28.9	35.0	40.0	47.3	58.3		4.0
45				○		83	85	70	18.5	23.5	32.5	39.3	45.0	53.2	65.6	~	4.0
50				○		83	85	72	20.5	26.1	36.1	43.7	50.0	59.1	72.9		4.0
55				○		83	85	72	22.6	28.7	39.7	48.1	55.0	65.0	80.2	900	4.0
60					○	75	80	70	24.6	31.3	43.3	52.4	60.0	70.9	87.5	800	5.0
70					○	78	83	70	28.7	36.5	50.5	61.2	70.0	82.7	102	~	5.0
80					○	80	83	72	32.8	41.8	57.8	69.9	80.0	94.6	117		5.0
90					○	82	85	72	36.9	47.0	65.0	78.7	90.0	106	131	1,000	5.0

HOW TO ORDER

To inquire about or order a specific nozzle please refer to this coding system.

Example: 3/8F JUP 03 S303

3/8F	JUP	03	S303
Pipe conn. size*1		Spray capacity code	Material*2
3/8F		03	S303
~		~	S316
1*1/2F		90	

*1) "F" indicates female thread ("Rc" of the ISO standard), e.g. 1*1/2F = Rc1 1/2.
*2) See "Material" information on page 69 for standard material (S303 or S316) for each size.

This nozzle series is made-to-order.