High-Frequency Pulse Spraying
Solenoid-Controlled Solid Stream Jet

Made-to-Order
SD-CC

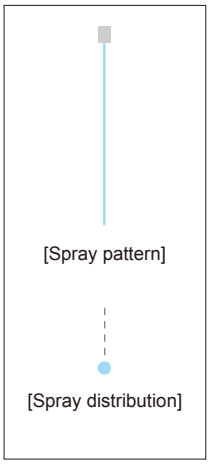

- Controls the spray ON/OFF with electrical signal ON/OFF. Intermittent spray with min. 0.05 sec/shot and as little as 0.05 cc/shot is possible.
- Ideal for applying a small amount of coating or marking with minimal splatter, saving liquid used.
- Nozzle tips can be replaced with a different orifice diameter code to adjust the spray flow rate.

[STANDARD PRESSURE]
0.3 MPa

[APPLICATIONS]
- ●Coating: Water, oil, lubricant, insecticide, herbicide, aqueous solution
- ●Moisture control: Paper, food ●Cooling: glass plate
- ●Suited for minimizing liquid splatter

SD-CC SERIES

Structure	● Includes a nozzle tip, cap, and adaptor-solenoid section. Worn-out nozzle tips can be replaced separately.
Material	● Nozzle tip: S303 ● Cap, Adaptor: S304 ● Solenoid section: Various materials
Weight	● Complete assembly: 220 g ● Nozzle tip: 13 g

Max. temperature: 60°C
Protection Structure IP67
The materials used in the parts that come into contact with liquids comply with the Food Sanitation Law in Japan.

[Note]
● Appearance and dimensions may differ slightly depending on material and nozzle code.

DRAWING

Unit: mm

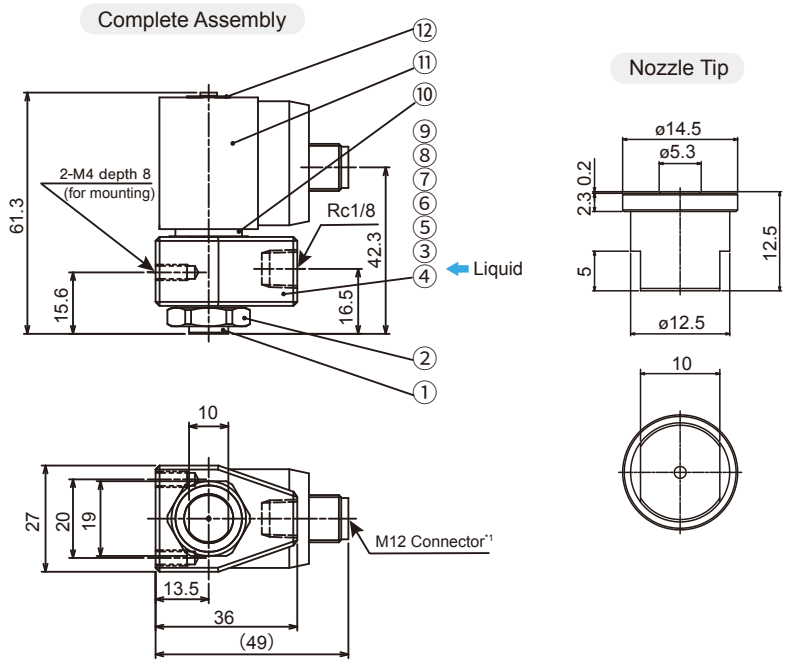

①Nozzle tip ②Cap ③O-ring S8 (FKM) ④Adaptor ⑤O-ring S16 (FKM)
⑥Tube assembly (S316 equiv., etc.) ⑦Movable iron core assembly (S316 equiv., etc.)
⑧Spring ⑨Packing ⑩Set nut ⑪Solenoid coil (S430 equiv., etc.) ⑫Clip

*1) Cable for M12 connector not included. Please use SMC Corporation's "JSX022-30-1-length" cable (length: 1m, 2m, or 5m).

Solenoid Specifications

Valve	
Valve structure	Direct acting poppet
Orifice diameter	ø1.6 mm
Pressure resistance	2.0 MPa
Max.operating pressure difference	0.9 MPa
Ambient temperature	-20–60°C
Operating fluid temperature (water)	1–60°C
Operating fluid temperature (oil)	-5–60°C (w/ dynamic viscosity of 50mm²/s or less)
Materials	Body: Stainless steel, Seal: FKM
Protection structure	IP67

Coil	
Rated voltage	24 VDC
Allowable voltage fluctuation	±10% of rated voltage
Allowable leakage voltage	Less than 2% of rated voltage
Electrical circuit	N.C.
Temperature rise value	65°C
Power consumption	4W

Orifice diameter code	Spray capacity (L/min)*2							
	0.05 MPa	0.1 MPa	0.15 MPa	0.2 MPa	0.3 MPa	0.5 MPa	0.7 MPa	0.9 MPa
ø0.3	0.04	0.05	0.06	0.07	0.09	0.12	0.14	0.16
ø0.4	0.07	0.10	0.12	0.14	0.17	0.22	0.26	0.29
ø0.5	0.11	0.16	0.19	0.22	0.27	0.35	0.41	0.47
ø0.6	0.16	0.22	0.27	0.31	0.38	0.49	0.58	0.66
ø0.7	0.21	0.29	0.36	0.42	0.51	0.66	0.78	0.88
ø0.8	0.27	0.38	0.47	0.54	0.66	0.85	1.01	1.14
ø0.9	0.33	0.47	0.58	0.67	0.82	1.06	1.25	1.42
ø1.0	0.41	0.58	0.71	0.82	1.00	1.29	1.53	1.73

*2) These values are for continuous spraying.

[Note] The above nozzles are manufactured for specific orifice diameters, therefore the spray capacity is not guaranteed.

Operation Time Chart

The electrical signal ON/OFF controls the spraying.

Electrical signal	OFF	ON	OFF	ON	OFF
Liquid	Stop	Spray	Stop	Spray	Stop

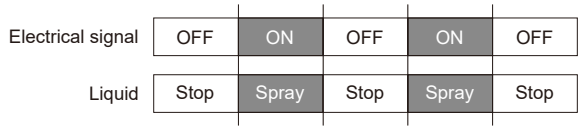

ALSO AVAILABLE!

Solenoid-Controlled
Flat Spray Nozzles

SD-VV
SERIES

See page 44 of this catalog.

HOW TO ORDER

To inquire about or order a specific nozzle please refer to this coding system.

①Complete Assembly

Example: CC ø0.3 S303 + SD S304

CC ø0.3 S303 + SD S304

Orifice diameter code: ø0.3 ~ ø1.0

Nozzle tip material

②Nozzle Tip Only

Example: CC ø0.3-SD-TIP S303

CC ø0.3 -SD-TIP S303

Orifice diameter code: ø0.3 ~ ø1.0

Nozzle tip material

This nozzle series is made-to-order.